STIRLING TUITION

Q4 (Angles in Quadrilateral) Day 146 Name: _____

1. Look at the **quadrilateral** below.

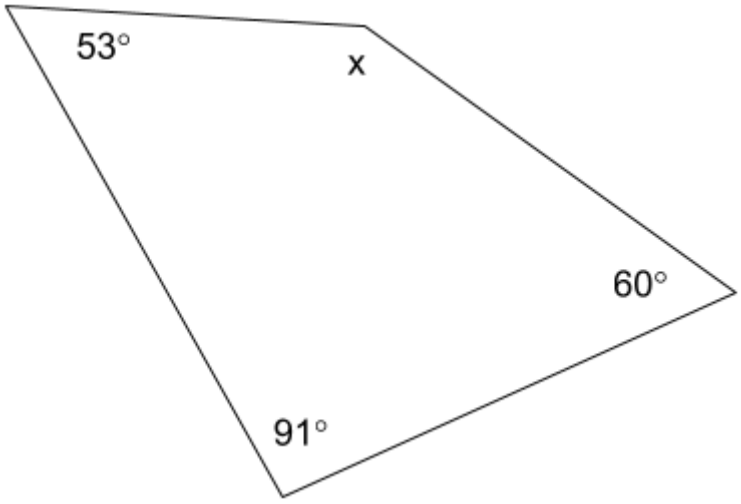

What is the value of **x**? Write your answer in the space below.

_____°

2. Look at the **quadrilateral** below.

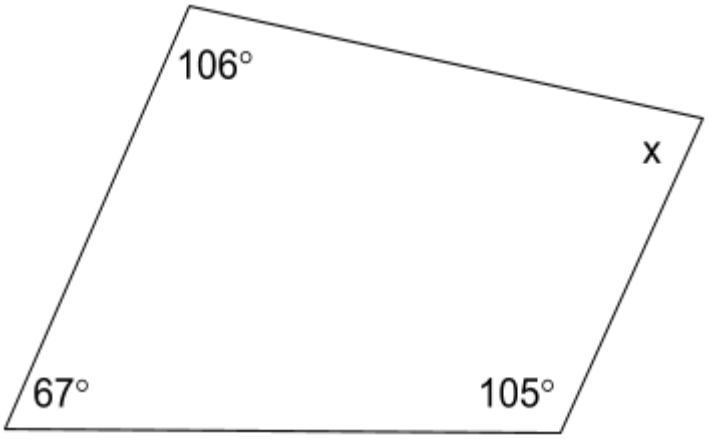

What is the value of **x**? Write your answer in the space below.

_____°

Copyright © StirlingTuition.com. No part of this paper may be photocopied, modified or otherwise reproduced without prior written permission.

3. Look at the **quadrilateral** below.

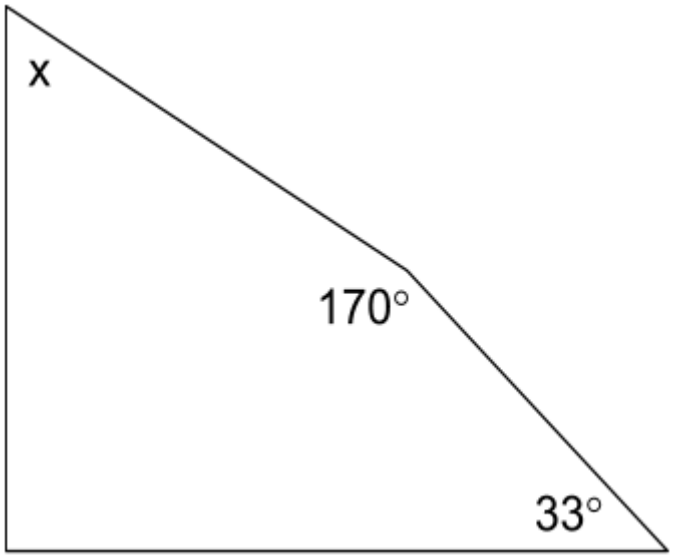

What is the value of **x**? Write your answer in the space below.

_____°

---

4. Look at the **quadrilateral** below.

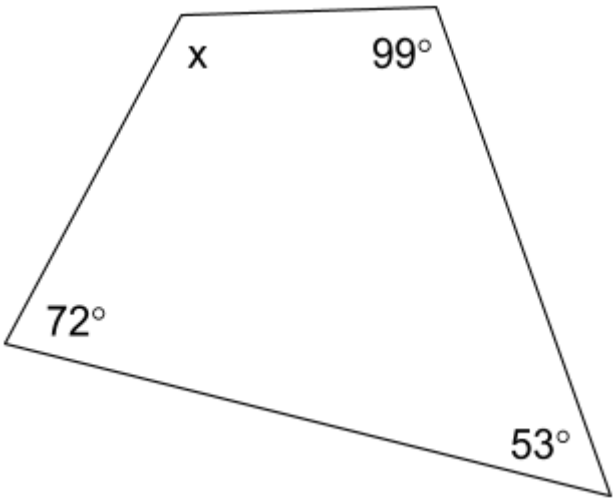

What is the value of **x**? Write your answer in the space below.

_____°

Copyright © StirlingTuition.com. No part of this paper may be photocopied, modified or otherwise reproduced without prior written permission.

5. Look at the **quadrilateral** below.

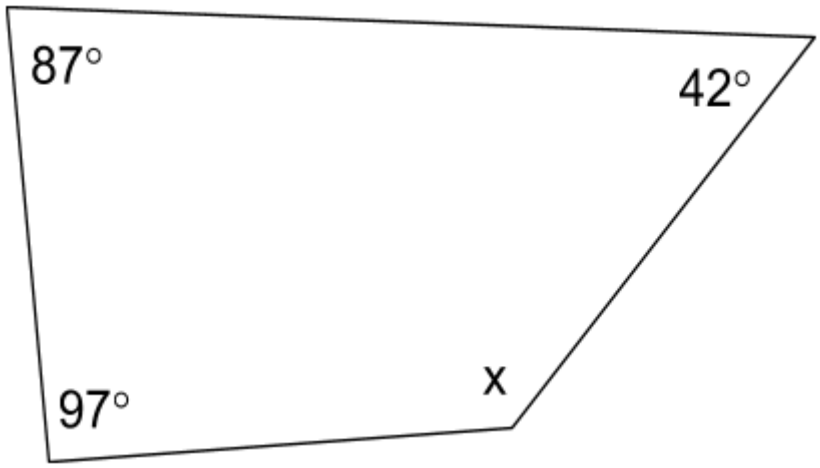

What is the value of **x**? Write your answer in the space below.

_____°

---

6. Look at the **quadrilateral** below.

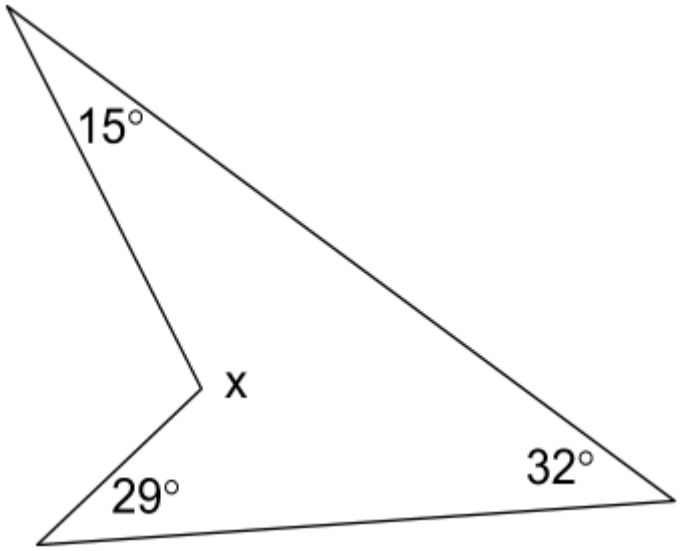

What is the value of **x**? Write your answer in the space below.

_____°

Copyright © StirlingTuition.com. No part of this paper may be photocopied, modified or otherwise reproduced without prior written permission.

7. Look at the **quadrilateral** below.

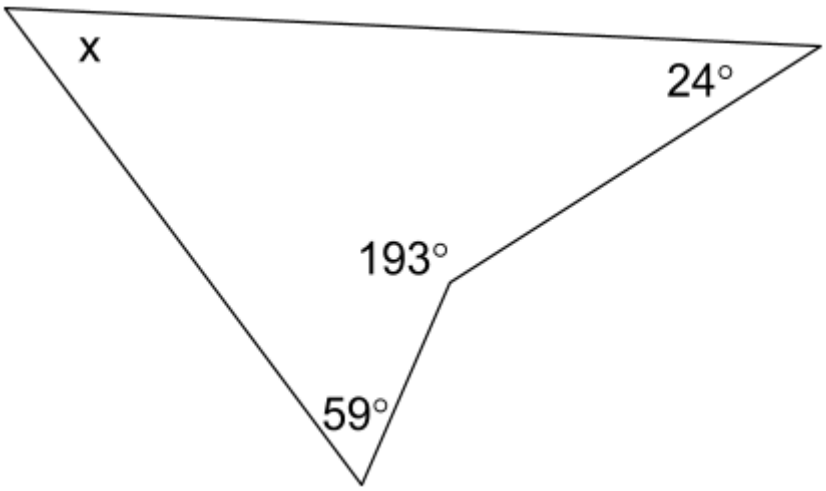

What is the value of **x**? Write your answer in the space below.

_____°

---

8. Look at the **quadrilateral** below.

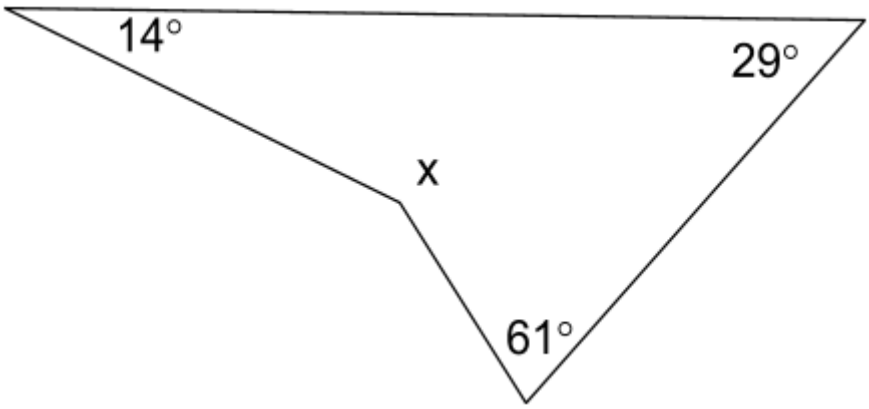

What is the value of **x**? Write your answer in the space below.

_____°

Copyright © StirlingTuition.com. No part of this paper may be photocopied, modified or otherwise reproduced without prior written permission.

9. Look at the **quadrilateral** below.

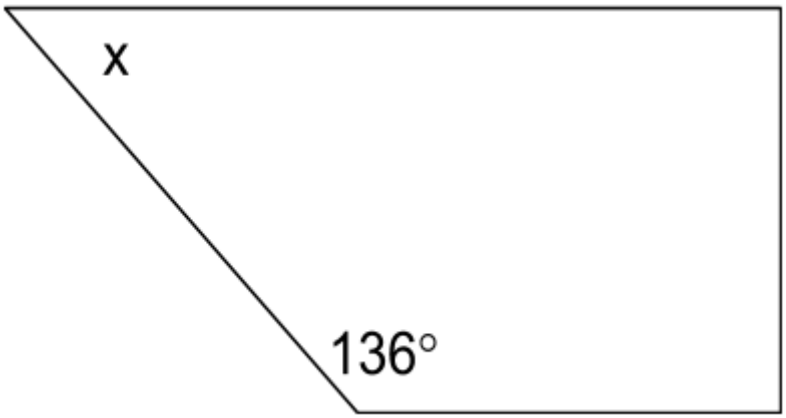

What is the value of **x**? Write your answer in the space below.

_____°

---

10. Look at the **quadrilateral** below.

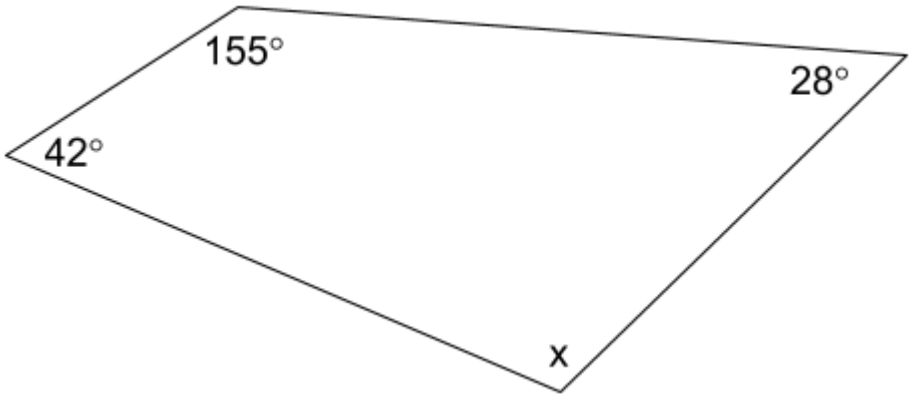

What is the value of **x**? Write your answer in the space below.

_____°

Copyright © StirlingTuition.com. No part of this paper may be photocopied, modified or otherwise reproduced without prior written permission.

11. Look at the **quadrilateral** below.

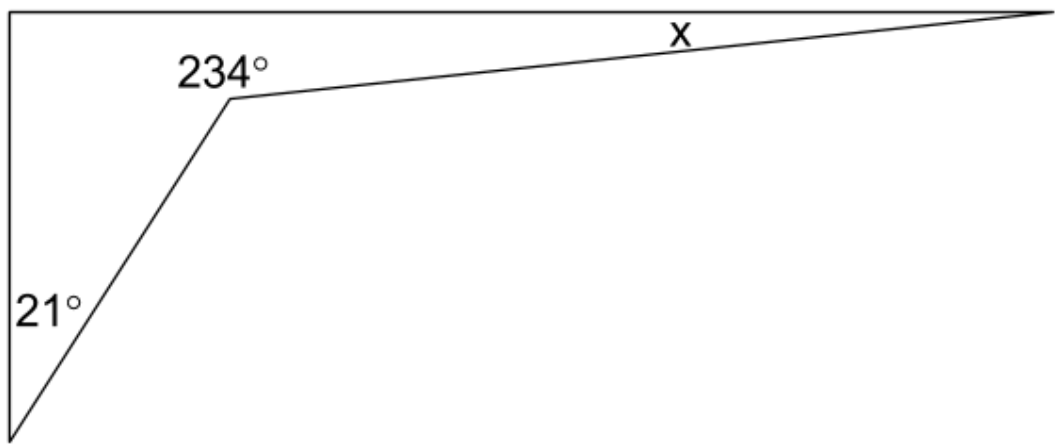

What is the value of **x**? Write your answer in the space below.

_____°

---

12. Look at the **quadrilateral** below.

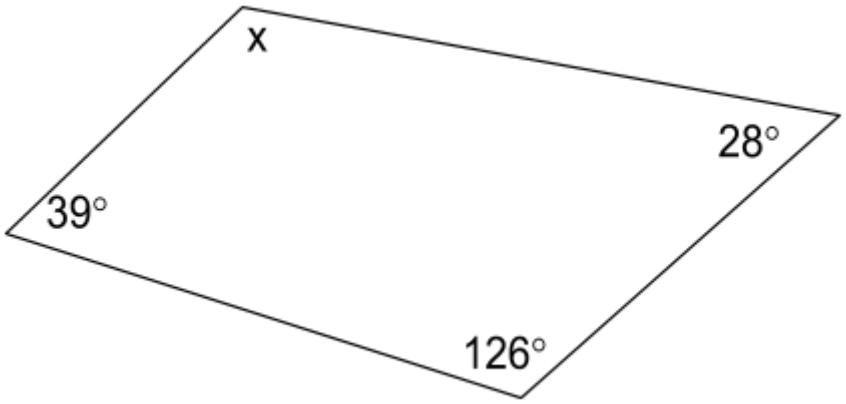

What is the value of **x**? Write your answer in the space below.

_____°

Copyright © StirlingTuition.com. No part of this paper may be photocopied, modified or otherwise reproduced without prior written permission.

STIRLING TUITION

Answers

1. **156**
2. **82**
3. **67**
4. **136**
5. **134**
6. **284**
7. **84**
8. **256**
9. **44**
10. **135**
11. **15**
12. **167**

Copyright © StirlingTuition.com. No part of this paper may be photocopied, modified or otherwise reproduced without prior written permission.